PROJECT REFERENCE NO.	SHEET NO.
EB-3314F	2
R/W SHEET NO.	

DocuSigned by: Greg S. Davis 33D47B5FD78F4A8... 1/13/2015

NORTH CAROLINA PROFESSIONAL SEAL 26930 ENGINEER GREG S. DAVIS

DIVISION DESIGN / CONSTRUCT ENGINEER

SECTION A–A

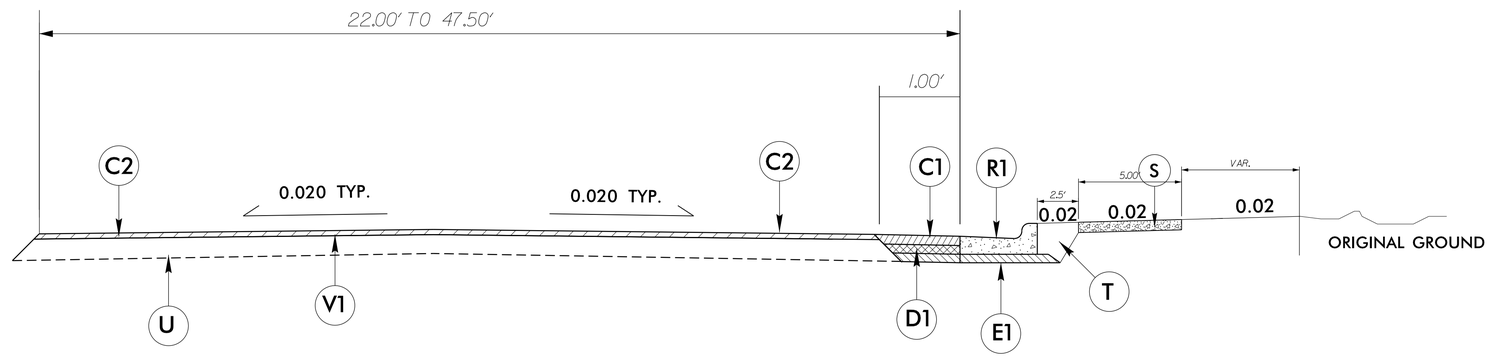

SECTION B–B

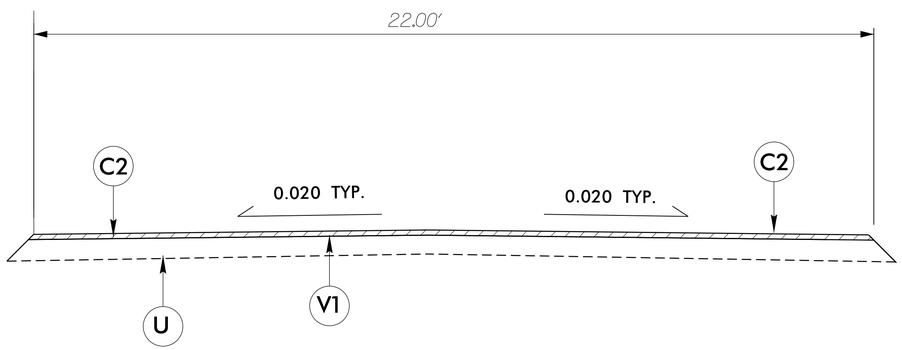

SECTION C–C

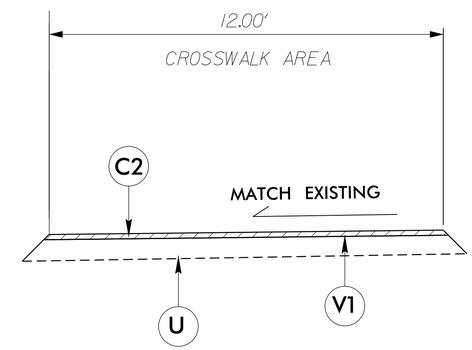

PAVEMENT SCHEDULE

C1	PROP. APPROX. 3" ASPHALT CONCRETE SURFACE COURSE, TYPE S9.5B, AT AN AVERAGE RATE OF 168 LBS. PER SQ. YD. IN EACH OF TWO LAYERS OF 1½".	S	4" CONCRETE SIDEWALK.
C2	PROP. APPROX. 1½" ASPHALT CONCRETE SURFACE COURSE, TYPE S9.5B, AT AN AVERAGE RATE OF 168 LBS. PER SQ. YD.	T	EARTH MATERIAL.
D1	PROP. APPROX. 4" ASPHALT CONCRETE INTERMEDIATE COURSE, TYPE I19.0B, AT AN AVERAGE RATE OF 456 LBS. PER SQ. YD.	U	EXISTING PAVEMENT.
E1	PROP. APPROX. 3" ASPHALT CONCRETE BASE COURSE, TYPE B25.0B, AT AN AVERAGE RATE OF 342 LBS. PER SQ. YD.	V1	1.5" MILLING
R1	2"-6" CONCRETE CURB AND GUTTER.	V2	0" TO 1.5" MILLING (FOR PAVEMENT TIE-IN)

REVISIONS

8/17/99

13-JAN-2015 16:42
z:\projects\ashlandrd_us311_pedestrian crossing\psh\eb-3314f_psh.dgn
gsdavis